Installation manual

ISC 230B intrinsically safe mains power supply and signal interface

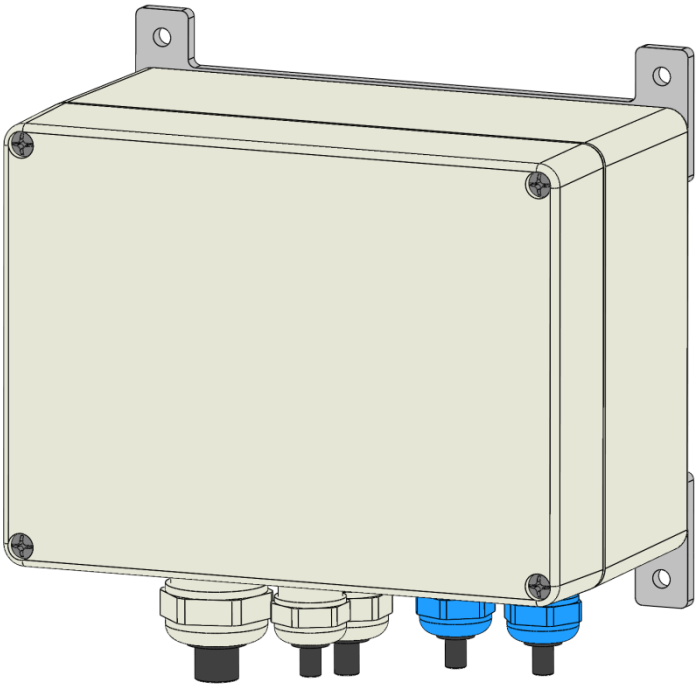

Wigersma & Sikkema

Since 1921

All the figures and descriptions in this installation manual have been compiled only after careful checking. Despite this, however, the possibility of errors cannot be completely eliminated. Therefore, no guarantee can be given for completeness or for the content. Also, the manual cannot be taken as giving assurance with regard to product characteristics. Furthermore, characteristics are also described that are only available as options.

The right is reserved to make changes in the course of technical development. We would be very grateful for suggestions for improvement and notification of any errors, etc.

With regard to extended product liability the data and material characteristics given should only be taken as guide values and must always be individually checked and corrected where applicable. This particularly applies where safety aspects must be taken into account.

Further support can be obtained from the branch or representative responsible for your area. The address is printed on the back of this manual or simply enquire at Wigersma & Sikkema B.V.

Passing this manual to third parties and its duplication, in full or in part, are only allowed with written permission from Wigersma & Sikkema B.V.

Preface

- This manual provides important information regarding the use of ISC230B. Read this manual carefully.
- Various observations and warnings are marked in this manual by means of symbols. Read these carefully and take measures if necessary.

The symbols used have the following meaning:

	**OBSERVATION**	Suggestions and recommendations to facilitate tasks.
	**PLEASE NOTE**	An observation alerts the user to possible problems.
	**WARNING**	If the action is not implemented correctly, data or settings may be lost.
	**ESD**	An observation alerts the user to take measures for ESD.

The guarantee becomes invalid if the product described here is not handled properly, repaired or modified by unauthorized persons or if replacement parts are used which are not genuine parts from Wigersma & Sikkema B.V.

Table of contents

1 Introduction

ISC230B is designed for use in meter set-ups with UNIGAS 300. ISC230B combines the functionality of explosion-safe pulse conversion and serial signal conversion as well as explosion-safe power supply of UNIGAS 300.

The ISC230B is powered by 230 VAC but can also be powered by low voltage (12 VAC or 12 - 15 V DC), thus also enabling supply with a contact-safe AC voltage or from a small solar system with a 12 V lead battery.

The ISC230B is equipped with explosion-safe barriers. These explosion-safe barriers are implemented on the basis of galvanic separation; no explosion-safe grounding is required.

There are three internal system connections to which a module can be connected. The following modules are available:

- Pulse-out module, order no. NN2671: module with 4 galvanically separated pulse outputs that can be configured freely.
- G485B module, order no. NN3656: module extending the ISC230B with an RS485 master or slave function to connect to a local meter network. This local network must be placed in the explosion-safe area.
- Ethernet module, order no. NN2566: module extending the ISC230B with an Ethernet connection. The Ethernet interface is manufactured by MOXA. Tools for setting up the Ethernet interface are available at the MOXA website.
- PSTN module, order no. NN2565: module extending the ISC230B with an analogue modem for a connection to a telephone line.
- RS232 module, order no. NN2567: module extending the ISC230B with a RS232 serial interface.
- 4 - 20 mA module, order no. GN2A000003; module allowing the ISC230B to be connected to a PC or PLC via a 4 - 20 mA signal.

ISC230B is double isolated and therefore all electronics are galvanically separated from (mains) ground. When used with the G485B or RS232 module, the RS485 bus or RS232 connection is also galvanically separated from the (mains) ground which prevents disturbances from ground loops. In the case of supplying ISC230B with a low voltage, it must be taken into account that ISC230B could be connected to (mains) ground via the low voltage supply and ground loops could exist. When a G485B or RS232 module is used, the use of a galvanically separated low voltage supply is preferred.

The ISC230B is equipped with a local bus connection. A maximum of 4 ISC230B devices or 1 mains operated UNILOG 300 and 3 ISC230B devices can be connected to this connection, with a maximum total cable length of 50 meter. This allows for easy addition of a number of mains supplied UNIGAS 300 devices, which can be read via the connection to the outside world (GSM/GPRS, Ethernet or PSTN). De connection between the devices can be established with 3 lead wire and the devices may be connected randomly to each other (star, chain, or a combination)

Other characteristics of the ISC230B are:

- Easy to install and connect
- Suitable for outdoor use
- Ambient temperature: -25°C to +55°C

From 1-2023, a different version of the ISC230B will be supplied where the NAMUR input is connected to the pulse IN1 input allowing the NAMUR input to be used for gas meters with HF output. This can be seen on the type plate and internally by the marking "HF" on the transformer. The type plate is attached to the left side of the housing

2 Explosion safety instructions (Ex)

See *DDN4800CVML EU Declaration of Conformity and Safety instructions*.

3 Models and type plate

From 1-2023, a different version of the ISC230B will be supplied where the NAMUR input is connected to the pulse IN1 input allowing the NAMUR input to be used for gas meters with HF output. This can be seen on the type plate and internally by the marking "HF" on the transformer. The type plate is attached to the left side of the housing

3.1 Type plate version until 01-2023 with NAMUR Encoder input

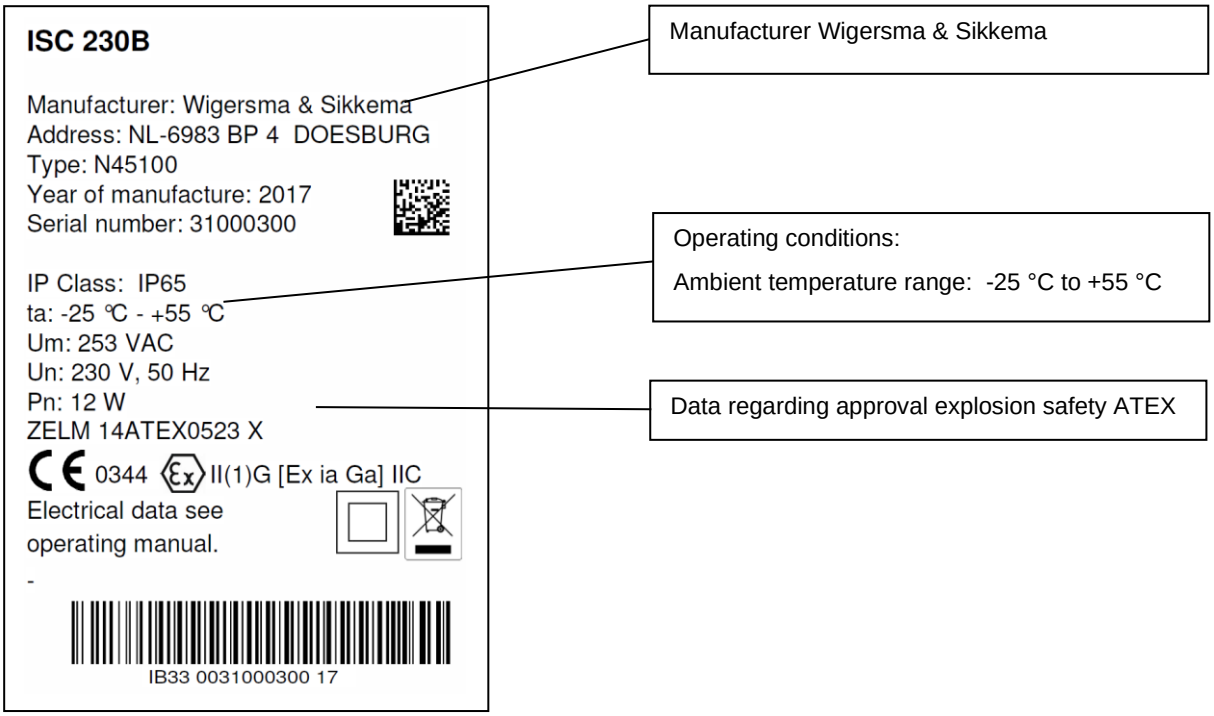

3.2 Type plate version as of 01-2023 with NAMUR HF input

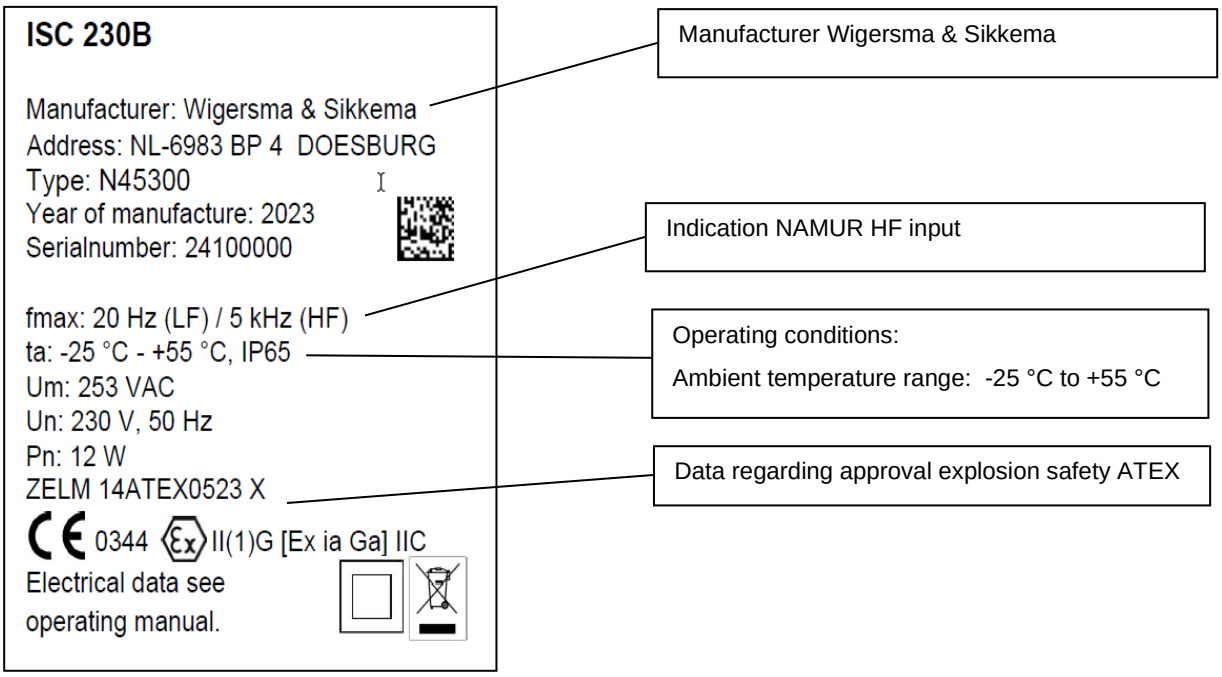

4 Functions

The figure below shows the functions schematically.
All functions are equipped with status LEDs so that it is easy to check whether the signals are present.

4.1 Version until 01-2023 with NAMUR encoder input

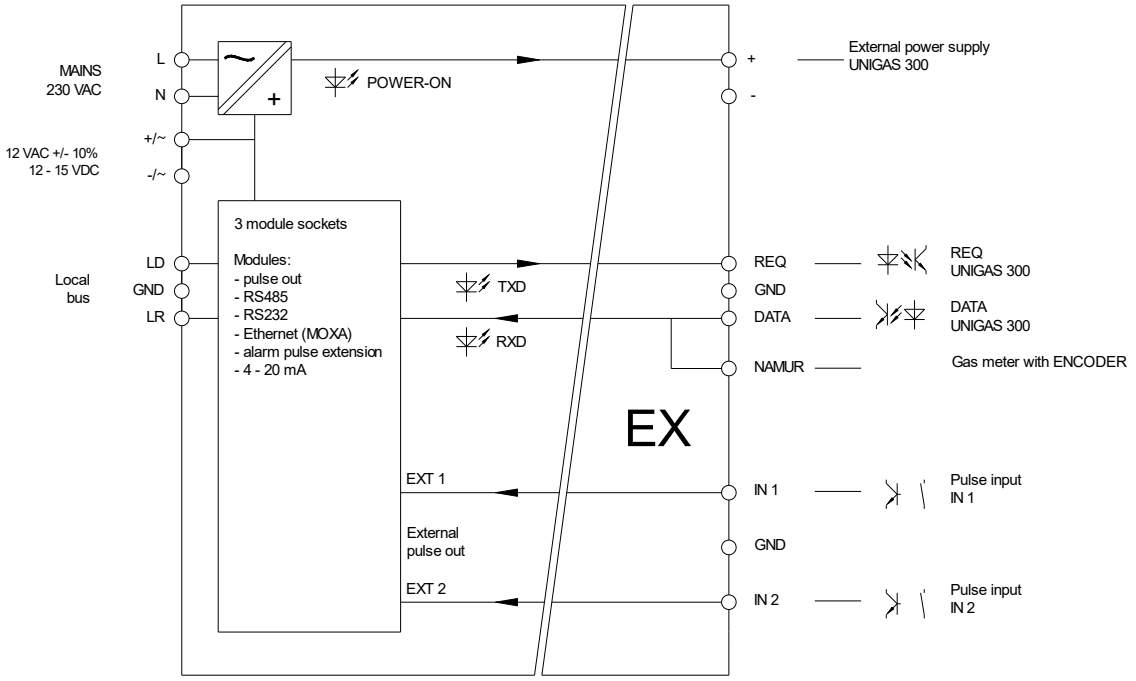

Figure 1. Schematic presentation of functions with NAMUR encoder input

4.2 Version as of 01-2023 with NAMUR HF input

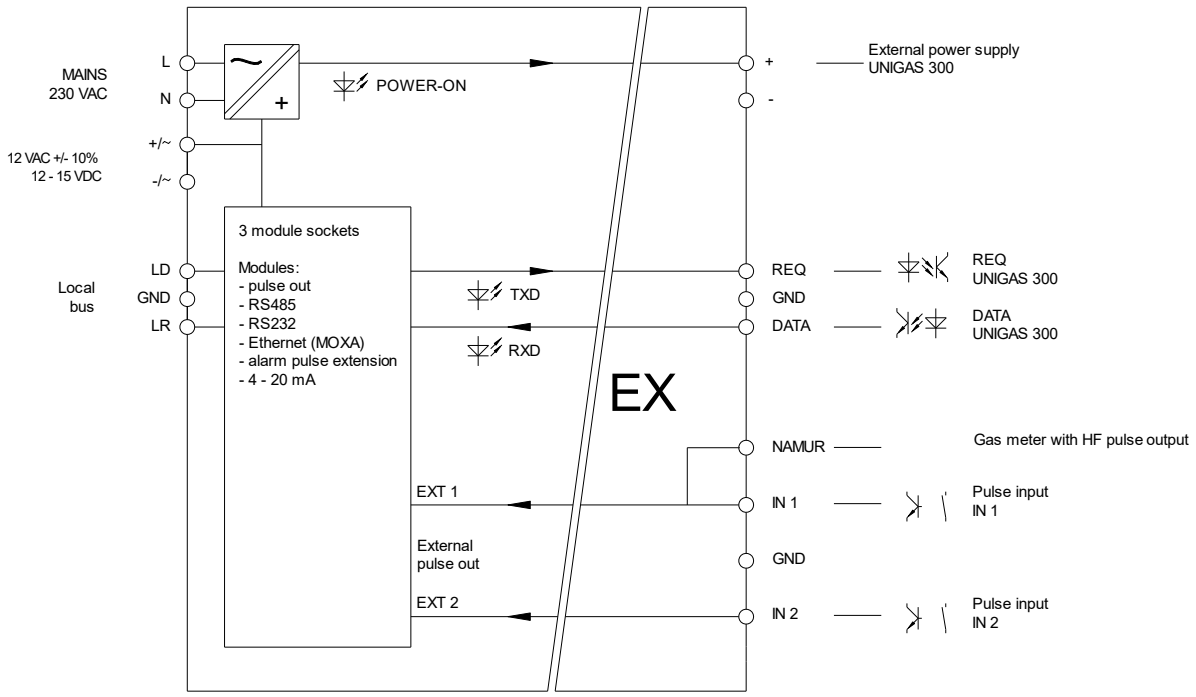

Figure 2. Schematic presentation of functions with NAMUR HF input

5 Opening and closing the casing

Before closing the casing, check to see that the sealing edge of the cover is clean over the entire circumference, that the sealing rests against the casing properly and over its entire length, and that all (four) screws are in place. First tighten the screws hand tight and then screw them tight crosswise.

6 Installation

The ISC230B casing is in protection class IP65 in conformity with EN60529. ISC230B may be installed outdoors.

Read first chapter 2, *Explosion safety instructions (Ex)*.

Depending on the function and the configuration of ISC230B, the inputs may have been configured at the factory and that the required cable(s) are installed.

Electrostatic discharges (ESD) can cause damage to internal electrical components if no precautions are taken. ESD is caused by static electricity and the damage caused is usually permanent.

6.1 Placement

ISC230B is equipped with installation brackets. ISC230B does not have to be opened before installation. The installation brackets have installation holes with M6 thread so ISC230B can also be installed via the other side of a wall.

Prevent contact of the casing with drilling, cutting or threading oil. Always install ISC230B with the cable glands pointed down.

6.2 Dealing with mains voltage

Read first chapter 2, *Explosion safety instructions (Ex)*.

Only qualified service personnel may handle installation and adaptations.

Before doing any maintenance disconnect the mains voltage.

Only connect the mains voltage if all cables are connected.

If connections are changed, check to make sure no mains voltage is connected and that it has been seen to that the mains voltage cannot be switched on.

Always place the EX protective cover over the mains connection, see *DDN4800CVML_EU Declaration of Conformity and Safety instructions*.

6.3 Components

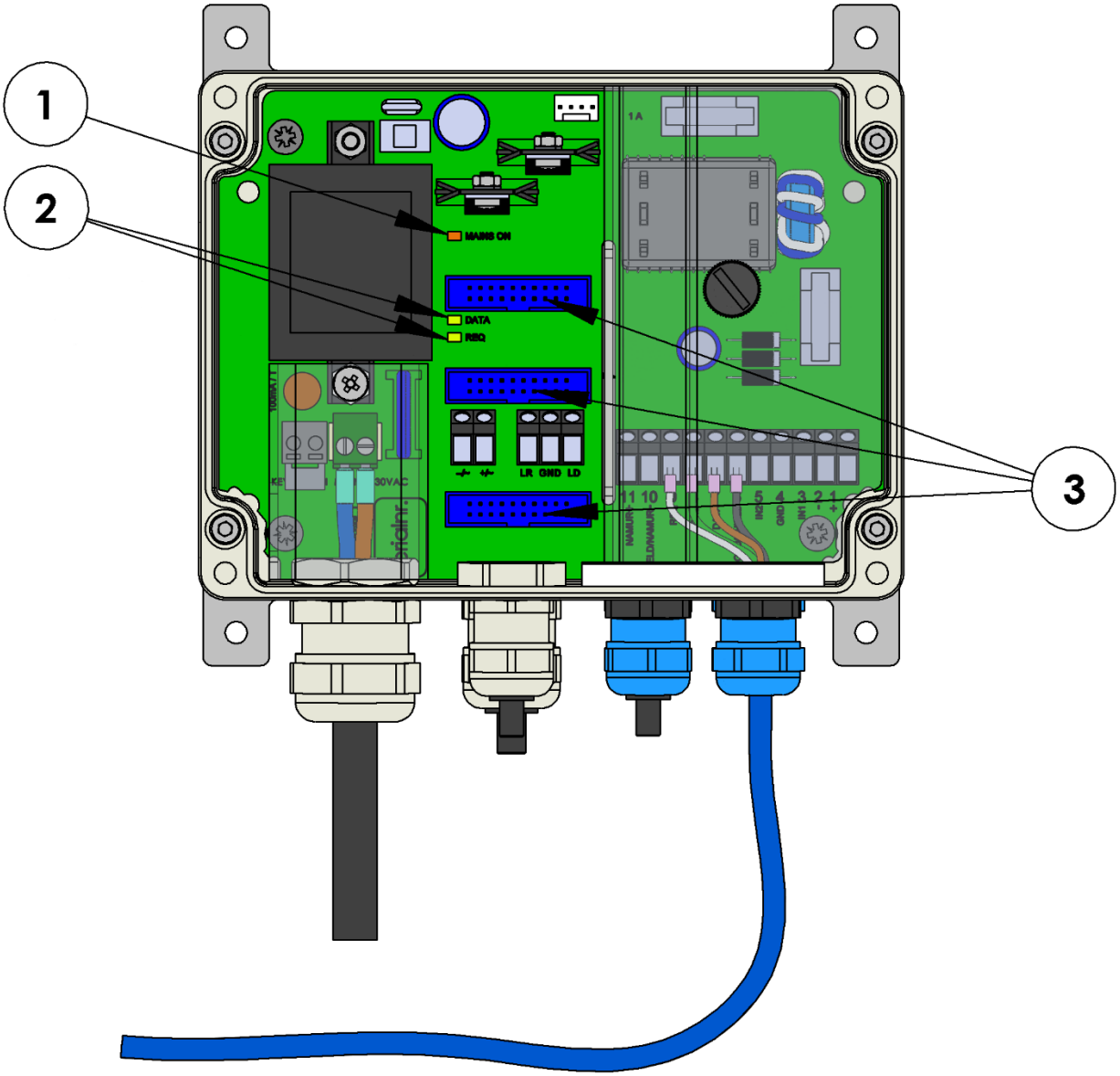

Figure 3. Opened ISC230B

1. Mains voltage live indicator (red)
2. Indicators for serial communication to meter (REQ) and from meter (DATA)
3. Connection for modules

6.4 Connections for power supply and local bus

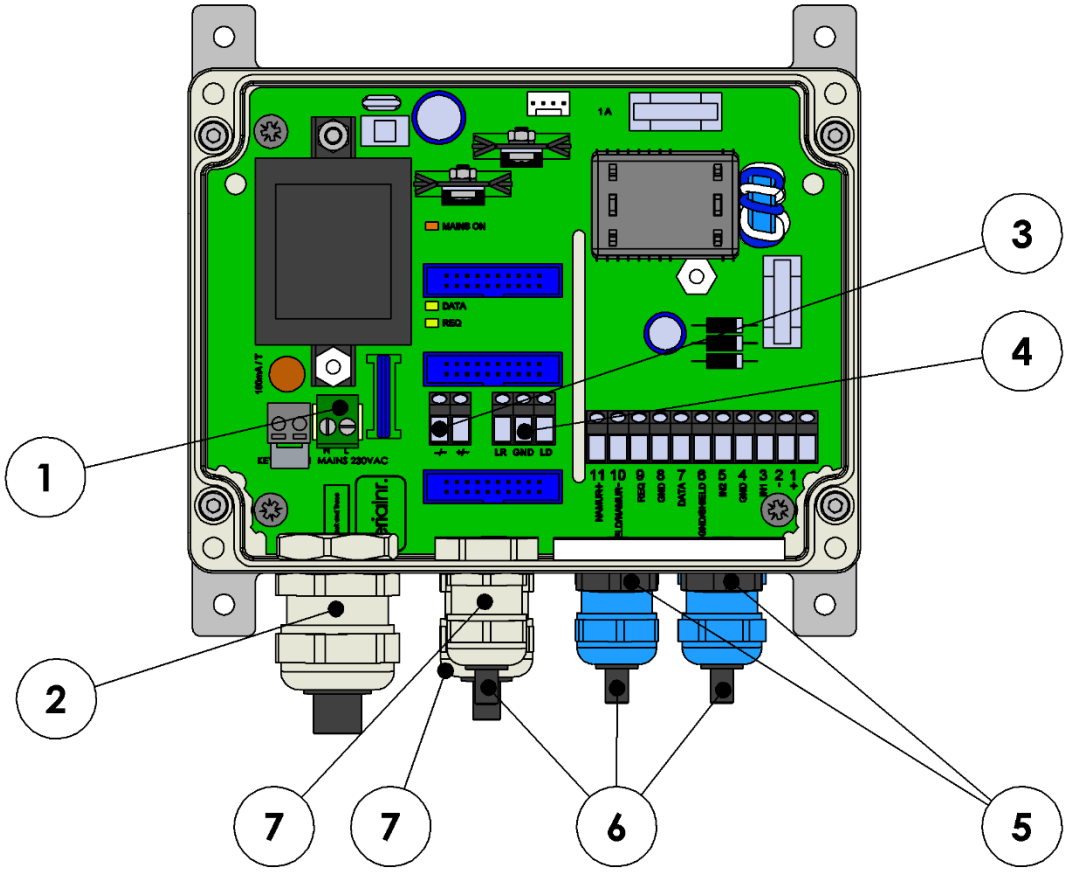

Figure 4. Opened ISC230B

1. Mains voltage connection
2. Cable gland and sealing cap for mains voltage connection
3. Connection for low-voltage supply
4. Connection for local bus
5. Stop for optional cable gland for modules.
6. Cap to seal the cable gland
7. Cable glands for modules, low-voltage power supply or local bus

Cable glands that are not used should be closed with the sealing caps provided.

6.5 Connecting to the mains voltage

Make sure the mains voltage connection is not live.

Push the mains cable through the cable gland to the plug inserted in the 230 VAC connections. Tighten the screw connection of the plug and tighten the gland properly.

Install the protective cover.

6.6 Input connections

ISC230B has 5 inputs and a power supply connection for UNIGAS 300. The terminal numbers and names are listed at the terminals in ISC230B (figure 5). The inputs are numbered in sequence from 1 through 11 (see table 1).

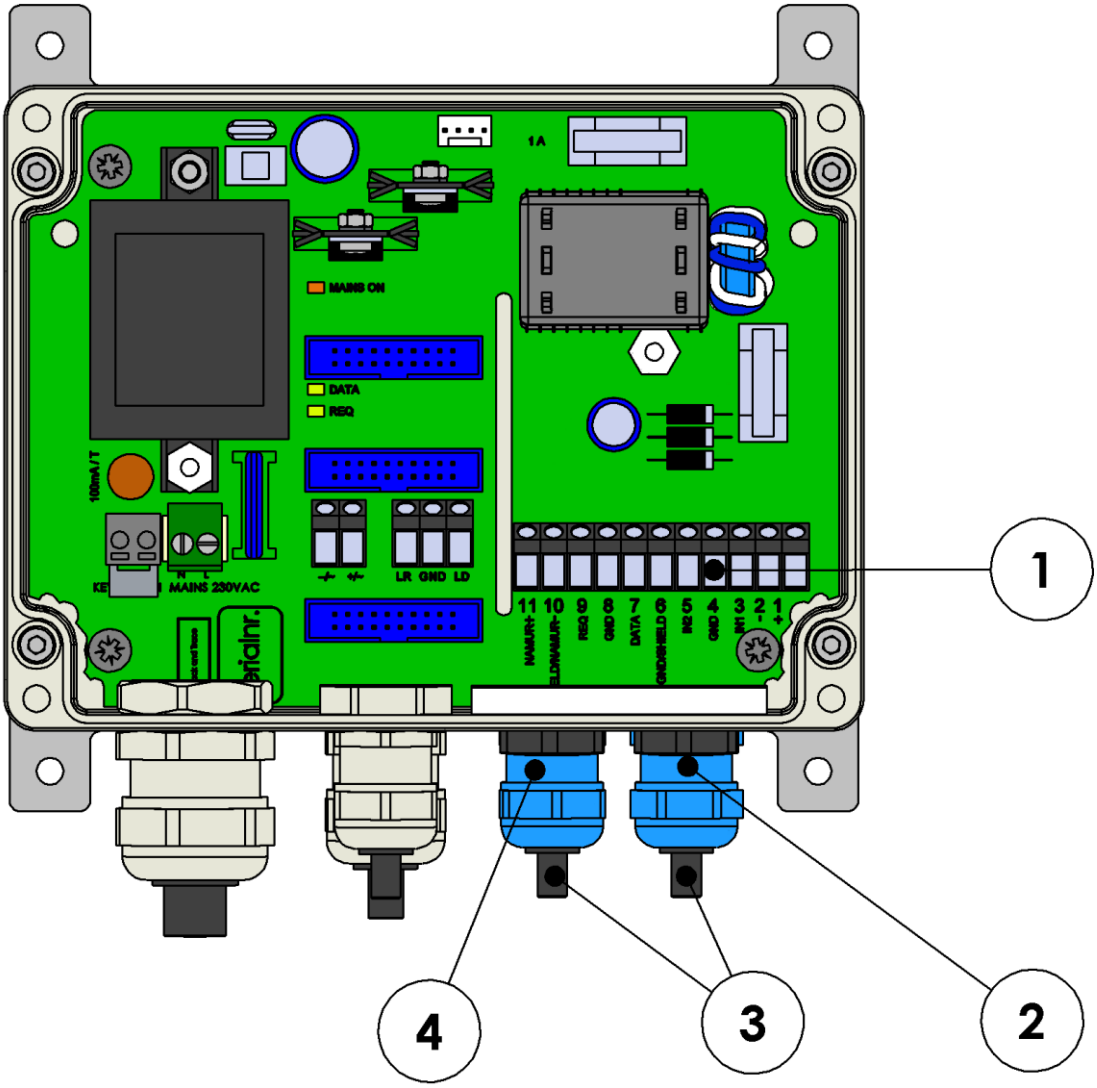

Figure 5. ISC230B connections

1. Terminals 1 - 11
2. Cable gland for the UNIGAS 300 and/or pulse input and power supply cable
3. Cap to seal the cable gland
4. Cable gland for Encoder cable or serial connection

Cable glands that are not used should be closed with the sealing caps provided.

Table 1. Connections

Input	Terminal number	Name	Function	Wigersma & Sikkema cable colour coding
UNIGAS 300 power supply	1	+	+ power supply for UNIGAS 300	Yellow
	2	-	- power supply for UNIGAS 300	Grey
Pulse	3	IN1	Connection for pulse input 1	Brown
	4	GND	Common earth for pulse	Green/Black
	5	IN2	Connection for pulse input 2	White
	6	GND/SHIELD	Common cable shield for pulse	
Serial	7	DATA	Serial data from UNIGAS EVCD	Brown
	8	GND	Earth connection for serial cable	Green/Black
	9	REQ	Serial data to UNIGAS EVCD	White
Encoder / HF (from 01-2023)	10	SHIELD/ NAMUR -	Cable shield for serial cable or connection to Encoder counter / HF sensor gas meter	-
	11	NAMUR +	Connection to Encoder counter / HF sensor gas meter	-

See chapter 7 for wiring diagrams for ISC230B and UNIGAS 300.

7 Specification

General

• Mains supply	230 VAC, 4 VA nominal, 12 VA peak
• Cable gland for line supply	Ø 10 -14 mm
• Low voltage supply	12 VAC +/-10%, 18 VA min. or 12 – 15 VDC 70 - 120 mA nominal + 100 mA for modules RS485B, Ethernet and PSTN
• ATEX approval	Ex _II_(1)_ G [Ex ia Ga] IIC ZELM 14 ATEX 0523 X Mounting in safe area only Um = 253 VAC
• Mounting bracket	Stainless Steel
• Protection class	IP 65
• Operating temperature	- 25°C to + 55°C
• Weight	2 kg
• Dimensions w x h x l	160 x 120 x 105 mm
• Material casing	Polycarbonate
• Colour	Grey, RAL7035
• Cables for serial and pulse connection	EMC shielded,
• Available lengths	5, 10, 15 or 20 metres, other lengths on request

Pulse inputs

• Input 1 and 2	Reed or transistor contact, 7.5 V, 0.6 mA active
• Cable gland	Ø 4 -8 mm
• Max input frequency	1 kHz 50 % DC

Serial input

• DATA and REQ (Tx and Rx)	7.5 V, Req 2 mA at mark, Data 1 mA at mark
• Max baud rate	9600 baud full duplex
• Cable gland	Ø 4 -8 mm

NAMUR input

• NAMUR input	U nominal 7.5 V, Ri = 1k
• Cable gland	Ø 4 -8 mm
• Max input frequency for model with HF	5 kHz 50 % DC

External power to meter – UNIGAS 300

- External power 7.5 V 100 mA peak – 50 mA continuous
- Cable gland shared with gland for pulse input

Status LEDs

- Mains live red
- Serial communication green, DATA and REQ

ATEX specification of inputs and external power

- Terminals 1 (+) and 2 (-)
  - Uo = 8.7 V
  - Io = 586 mA
  - Po = 1.3 W
  - Co = 5.8 uF
  - Lo = 0.1 mH
- Terminals 3 (IN1) and 4, 5 (IN2) and 6, 9 (REQ) and 8
  - Uo = 8.7 V
  - Io = 3 mA
  - Po = 7 mW
  - Co = 5.8 uF
  - Lo = 100 mH
- Terminals 7 (DATA) and 8
  - Uo = 8.7 V
  - Io = 18 mA
  - Po = 38 mW
  - Co = 5.8 uF
  - Lo = 90 mH
- Terminal 11 (NAMUR+) and 10
  - Uo = 8.7 V
  - Io = 9 mA
  - Po = 20 mW
  - Co = 5.8 uF
  - Lo = 100 mH

8 Wiring diagrams ISC230B – UNIGAS 300

8.1 Serial connection to UNIGAS 300

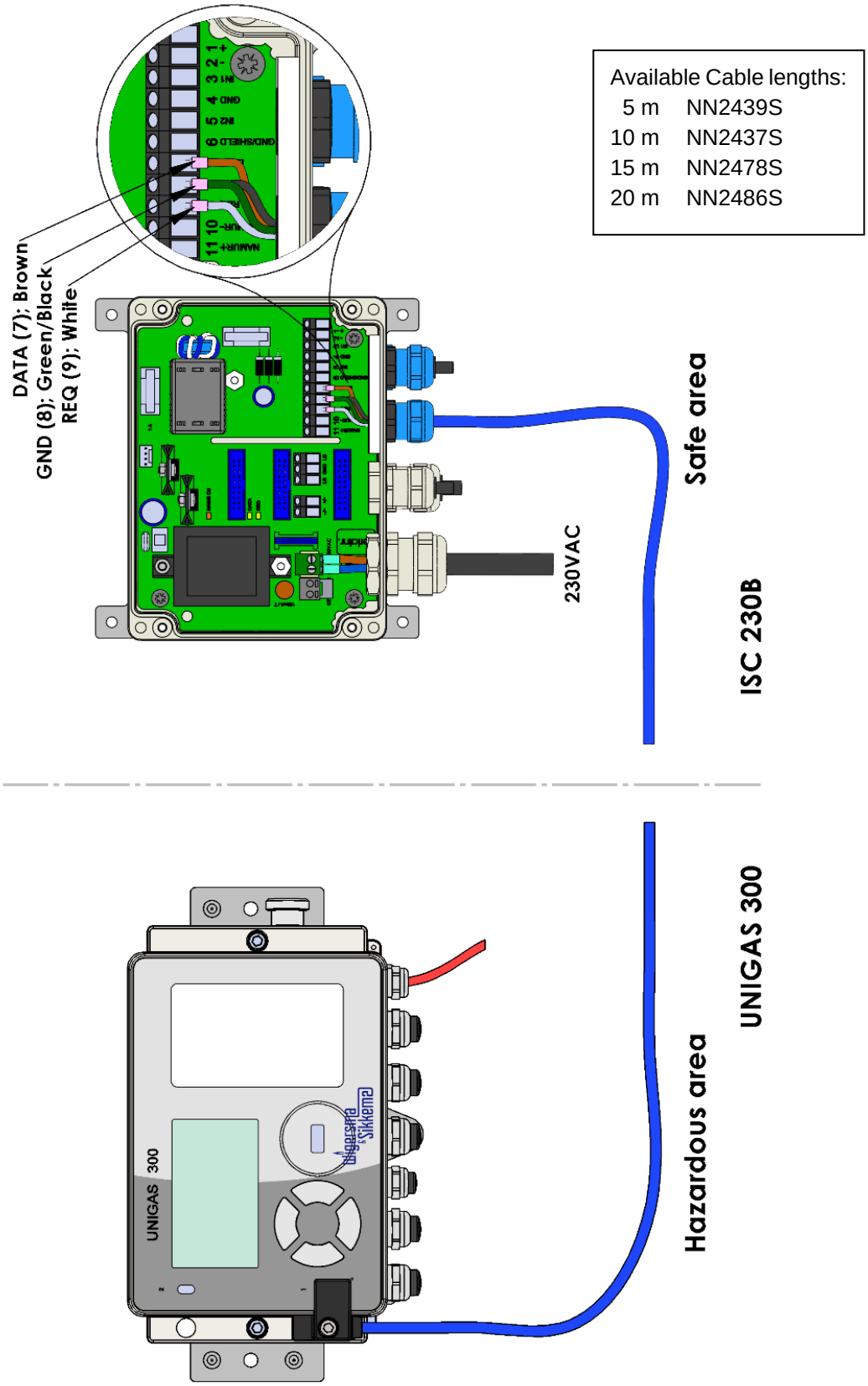

8.2 Pulse connection ISC230B to UNIGAS 300

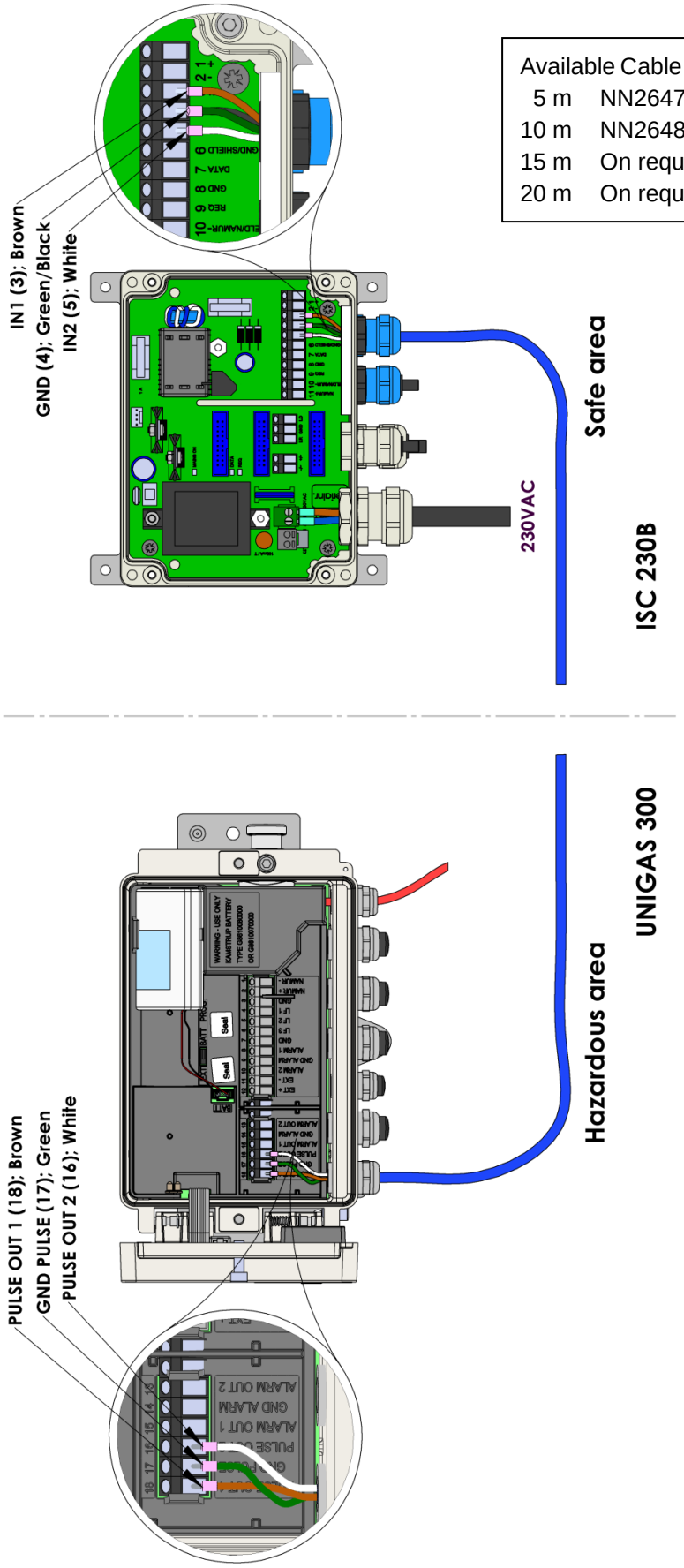

Available Cable lengths:

5 m	NN2647
10 m	NN2648
15 m	On request
20 m	On request

8.3 Pulse and external power connection ISC230B to UNIGAS 300

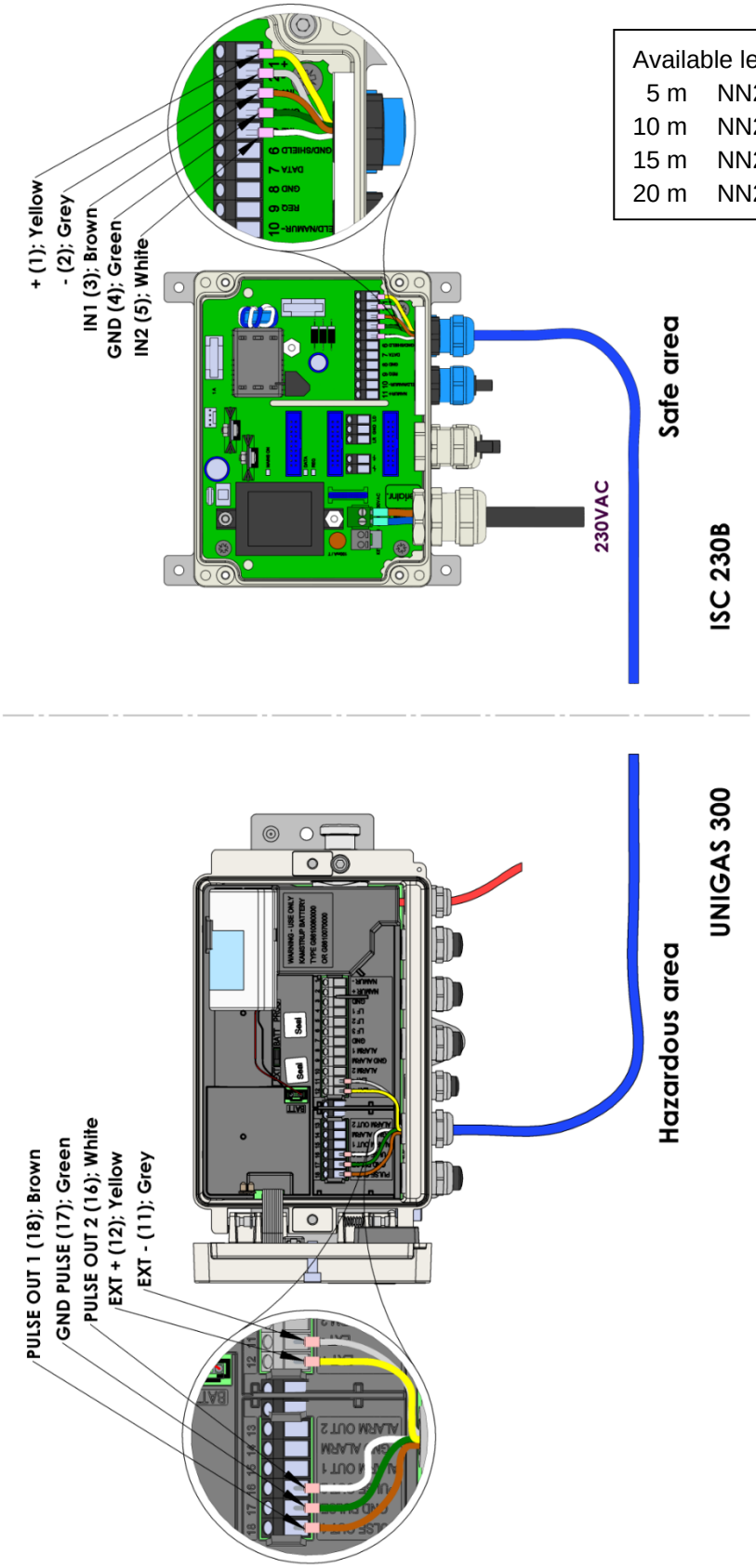

Available lengths:

5 m	NN2630
10 m	NN2631
15 m	NN2632
20 m	NN2624

9 Setup of a local meter network

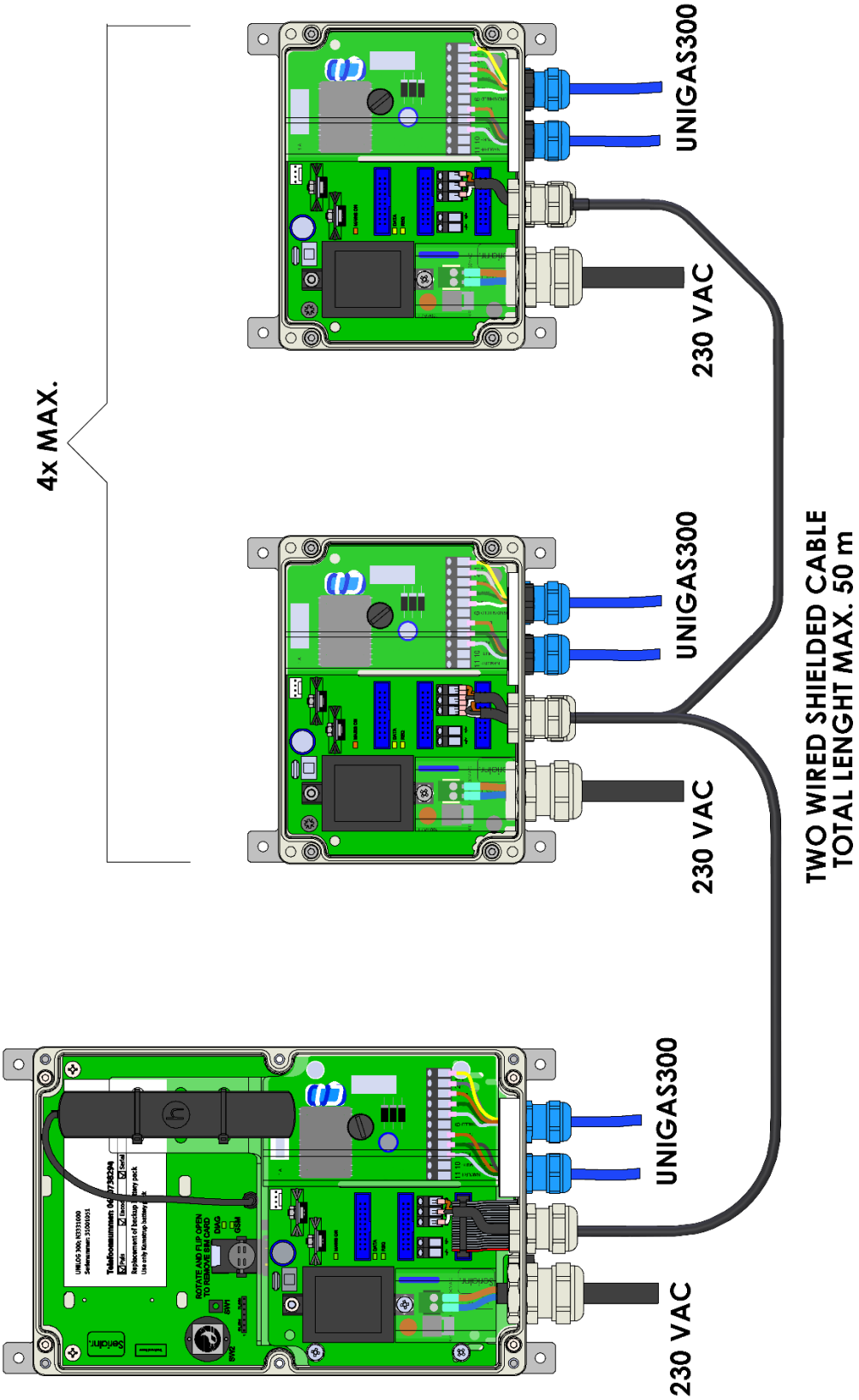

Since 1921
Wigersma & Sikkema B.V.
Leigraafseweg 4
NL-6983 BP Doesburg
The Netherlands
TEL: +31 (0)313 – 47 19 98
info@wigersma-sikkema.com
www.wigersma-sikkema.com

DDN4001MHGB/03-2023/Rev.A4